0 601 194 639

Stand ~~03-03~~
Issue 05-09-12
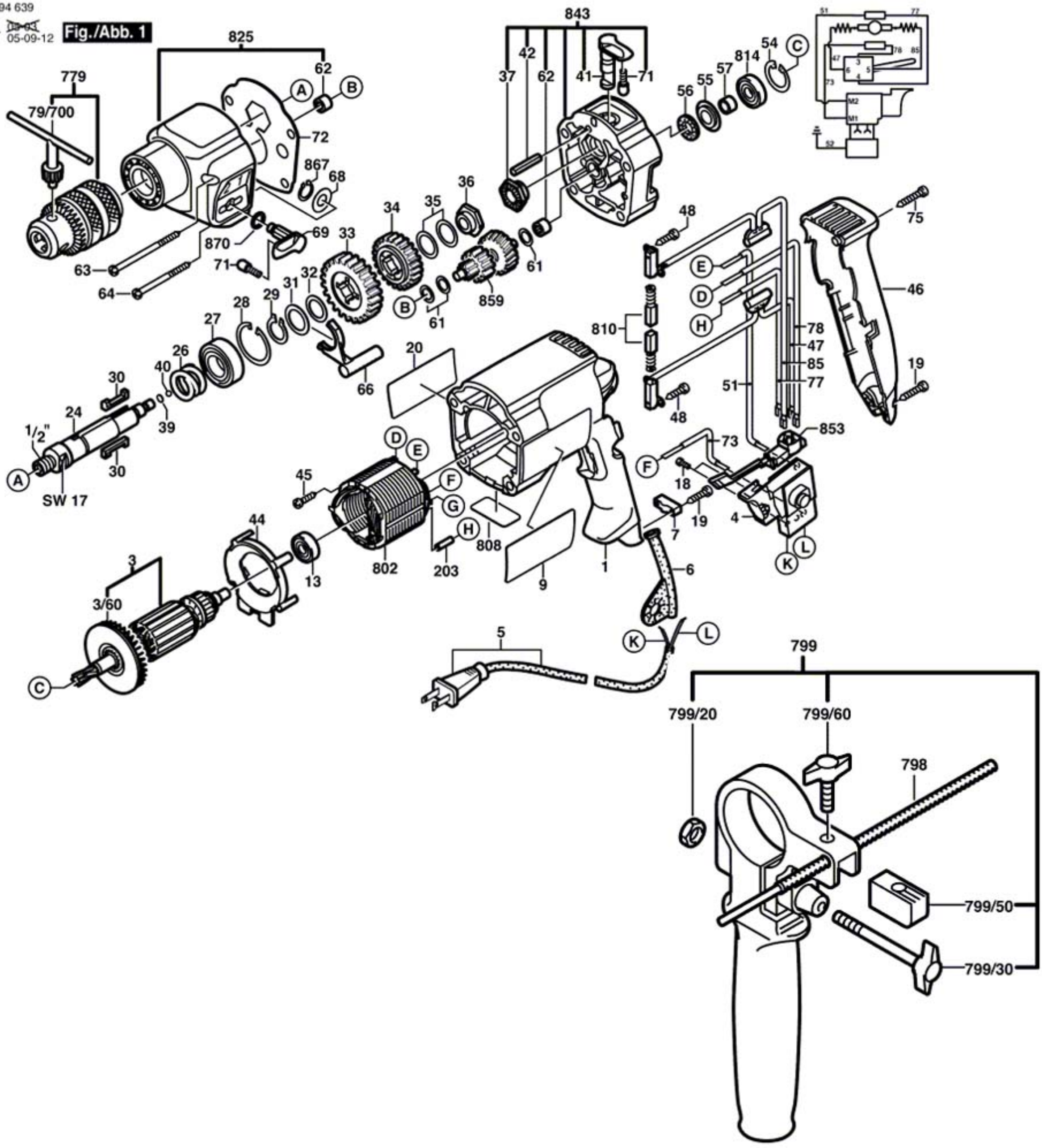
Fig./Abb. 1