3 601 H20 010

Stand / Issue ~~08-04~~ 09-06-26

Fig./Abb. 1

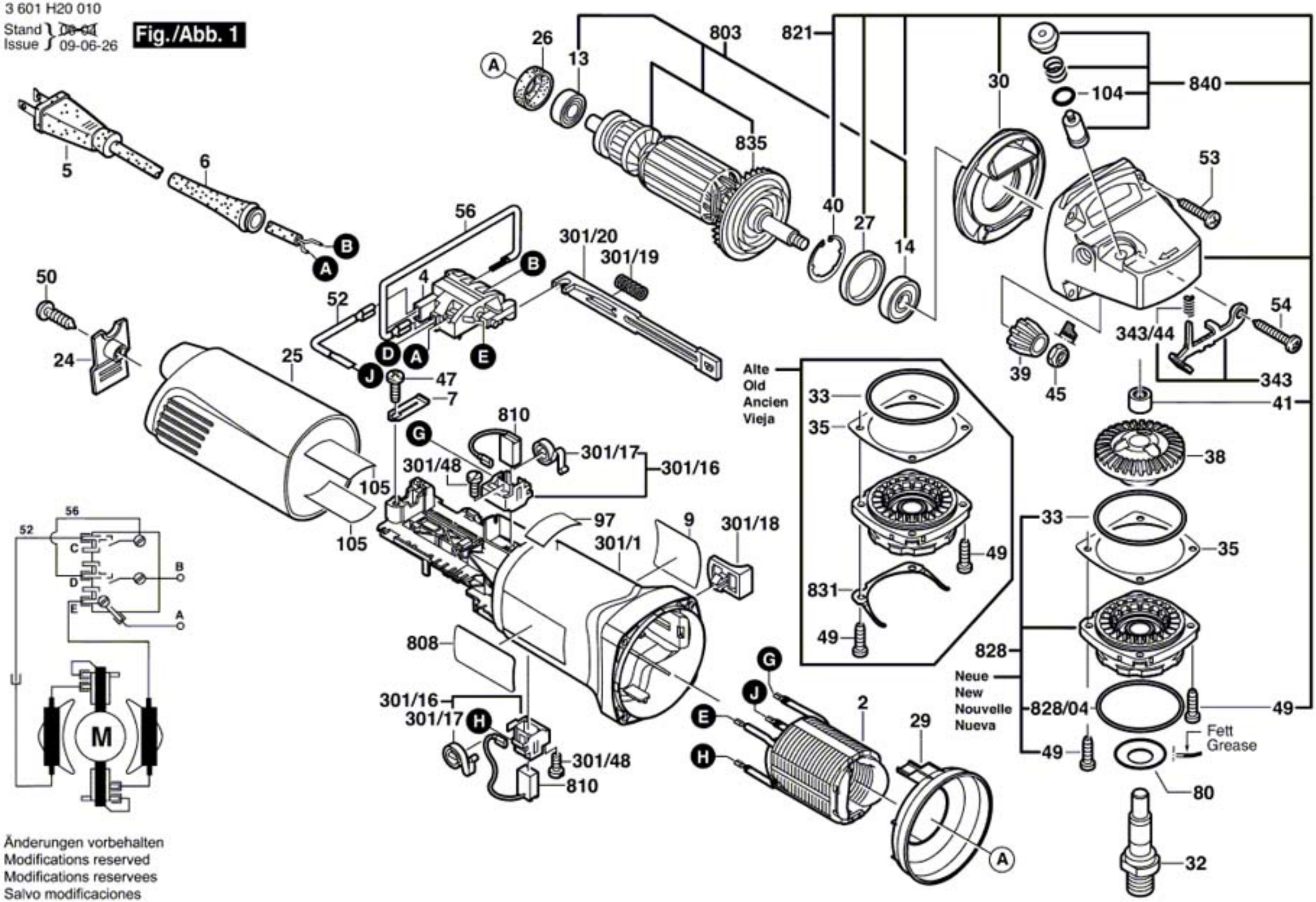

Änderungen vorbehalten
Modifications reserved
Modifications reservees
Salvo modificaciones

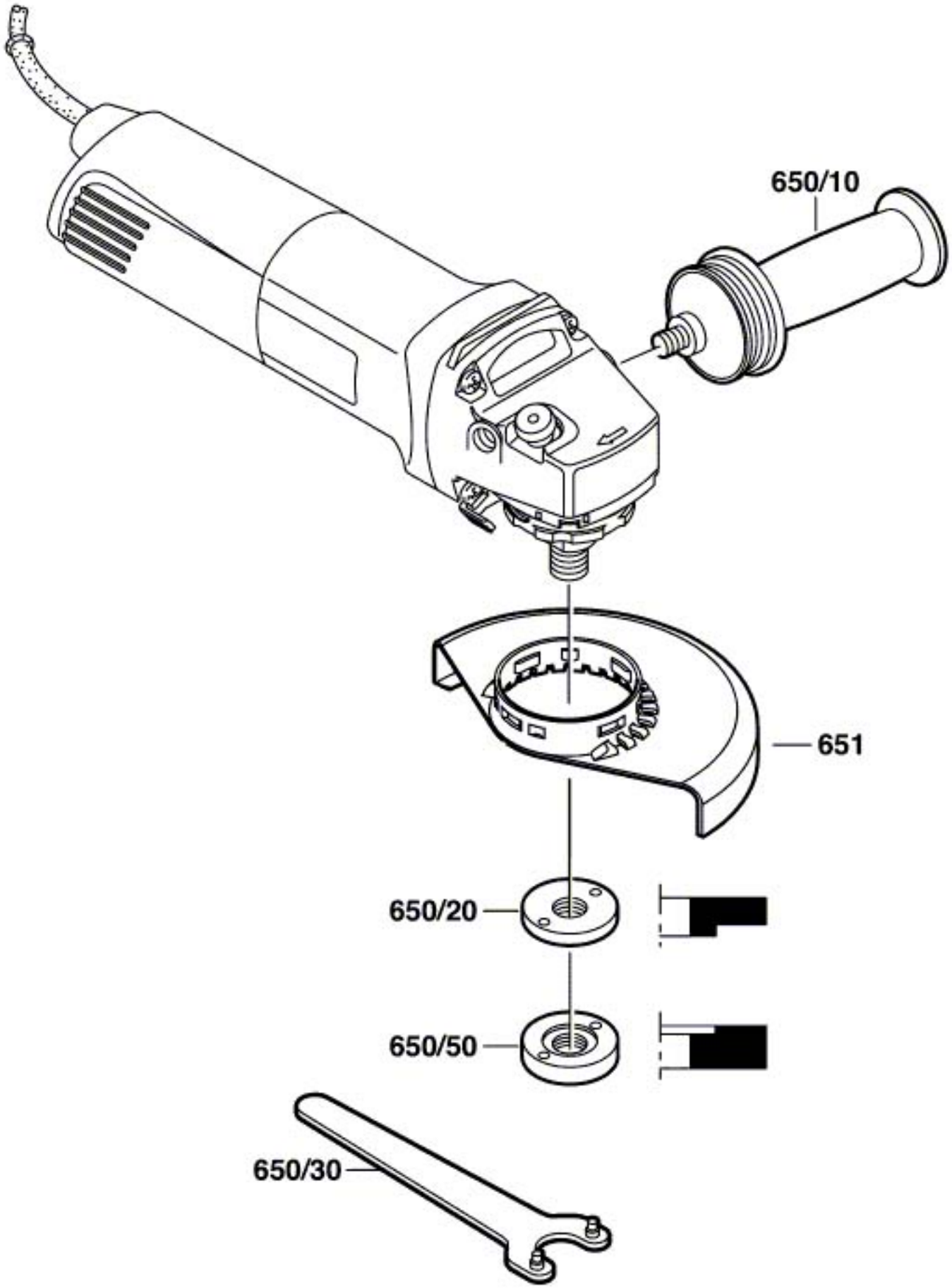
650/10
651
650/20
650/50
650/30