0 601 936 647

Issue / Stand } 00-03-23
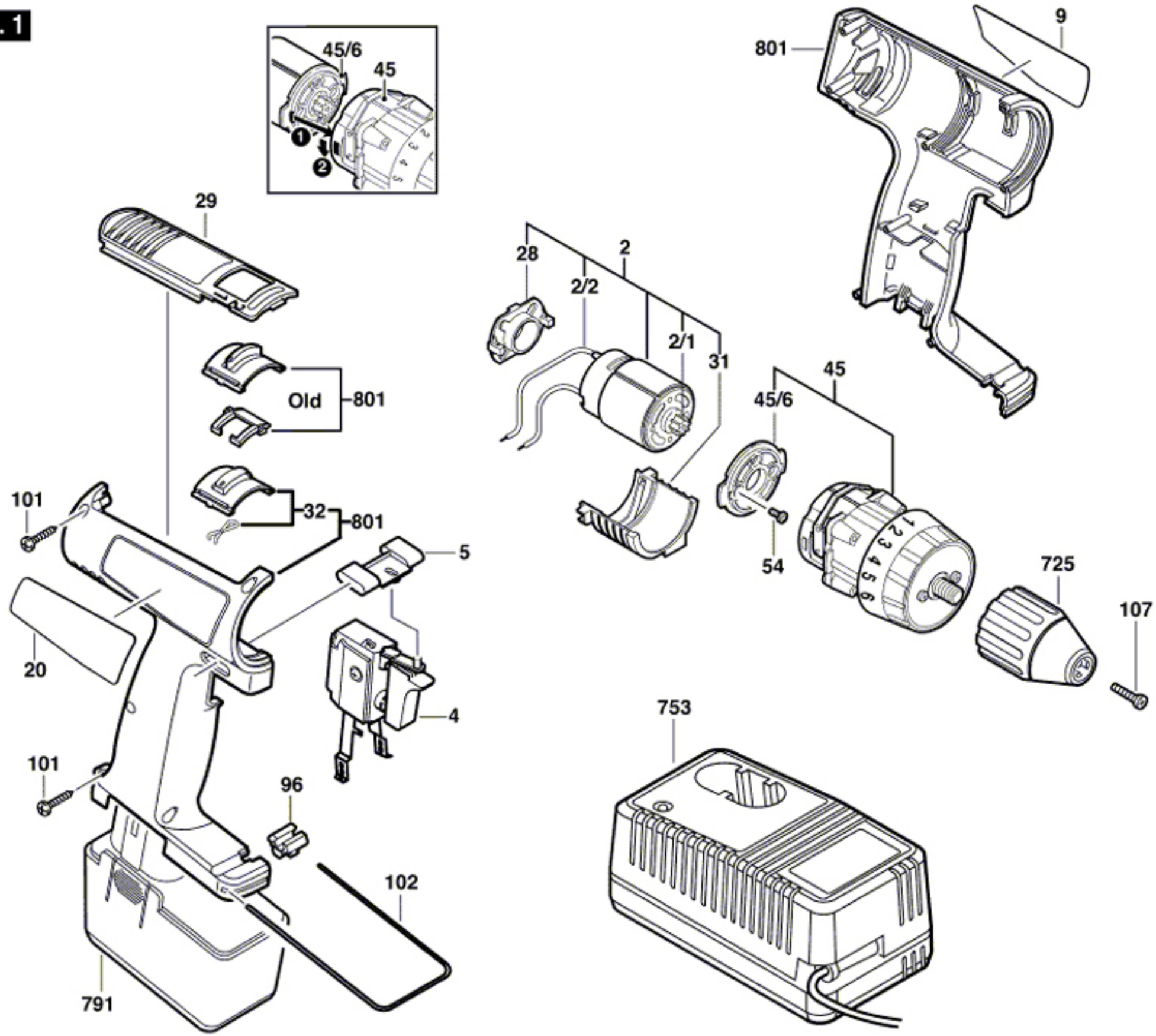
Fig./Abb. 1