0 601 916 560
Stand ~~03-12~~
Issue 06-01-25

Fig./Abb. 1

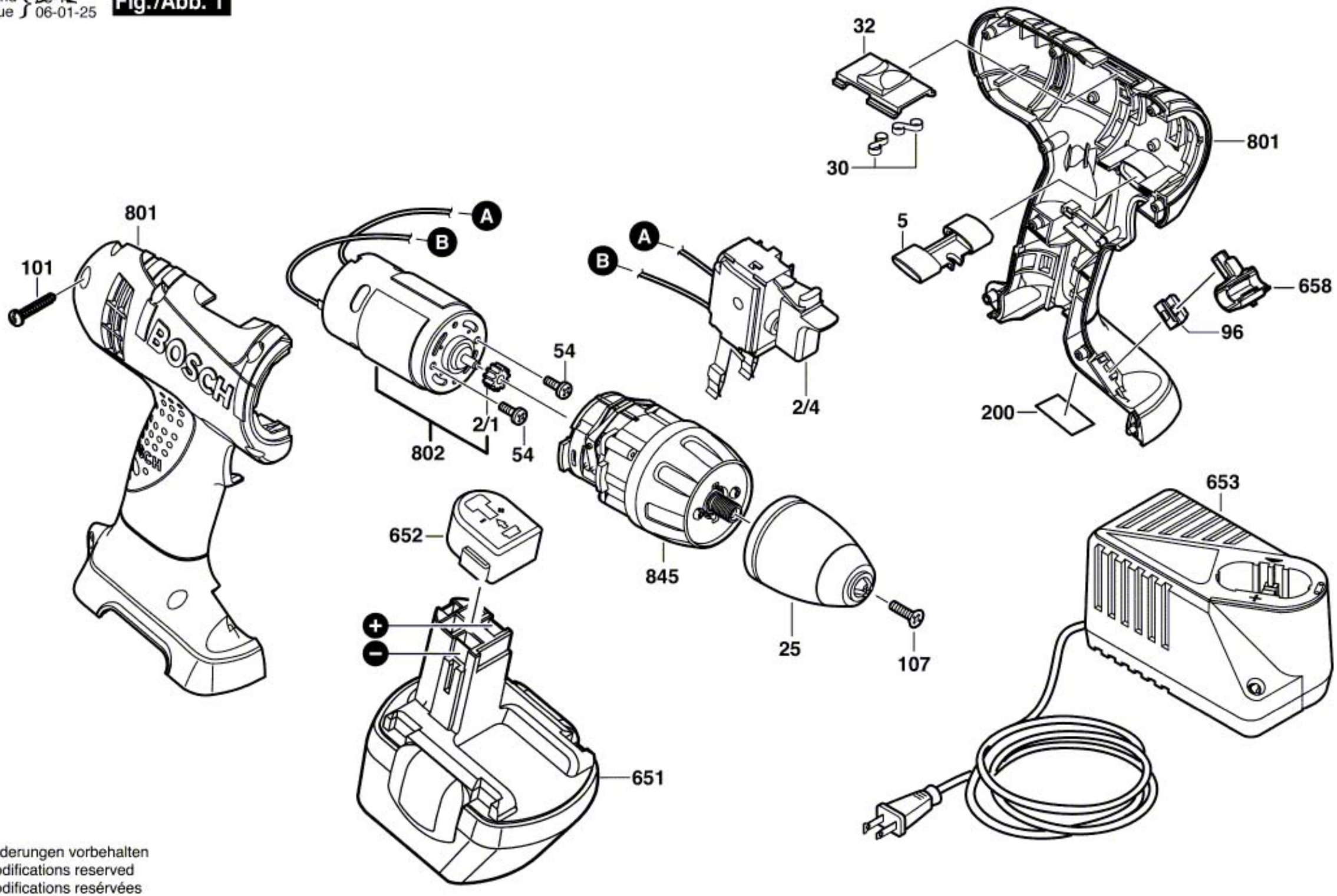

Änderungen vorbehalten
Modifications reserved
Modifications resérvées
Salvo modificaciones