0 603 365 039
Stand } ~~10-11~~
Issue } 04-10-06

Fig./Abb. 1

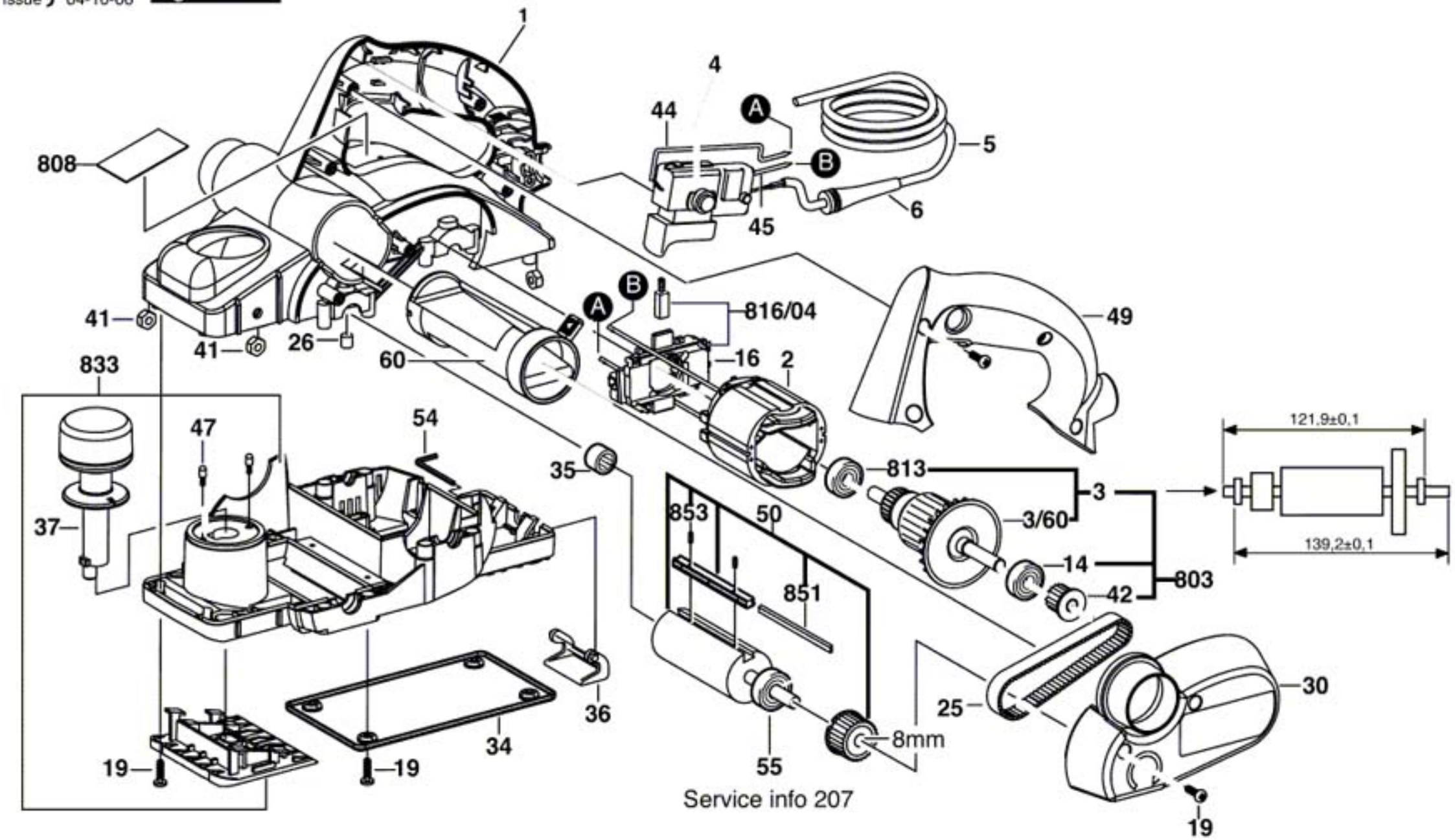

Änderungen vorbehalten
Modifications reserved
Modifications reservees
Salvo modificaciones