3 601 J95 410

Stand ~~07-02-21~~
Issue 07-02-22

Fig./Abb. 1

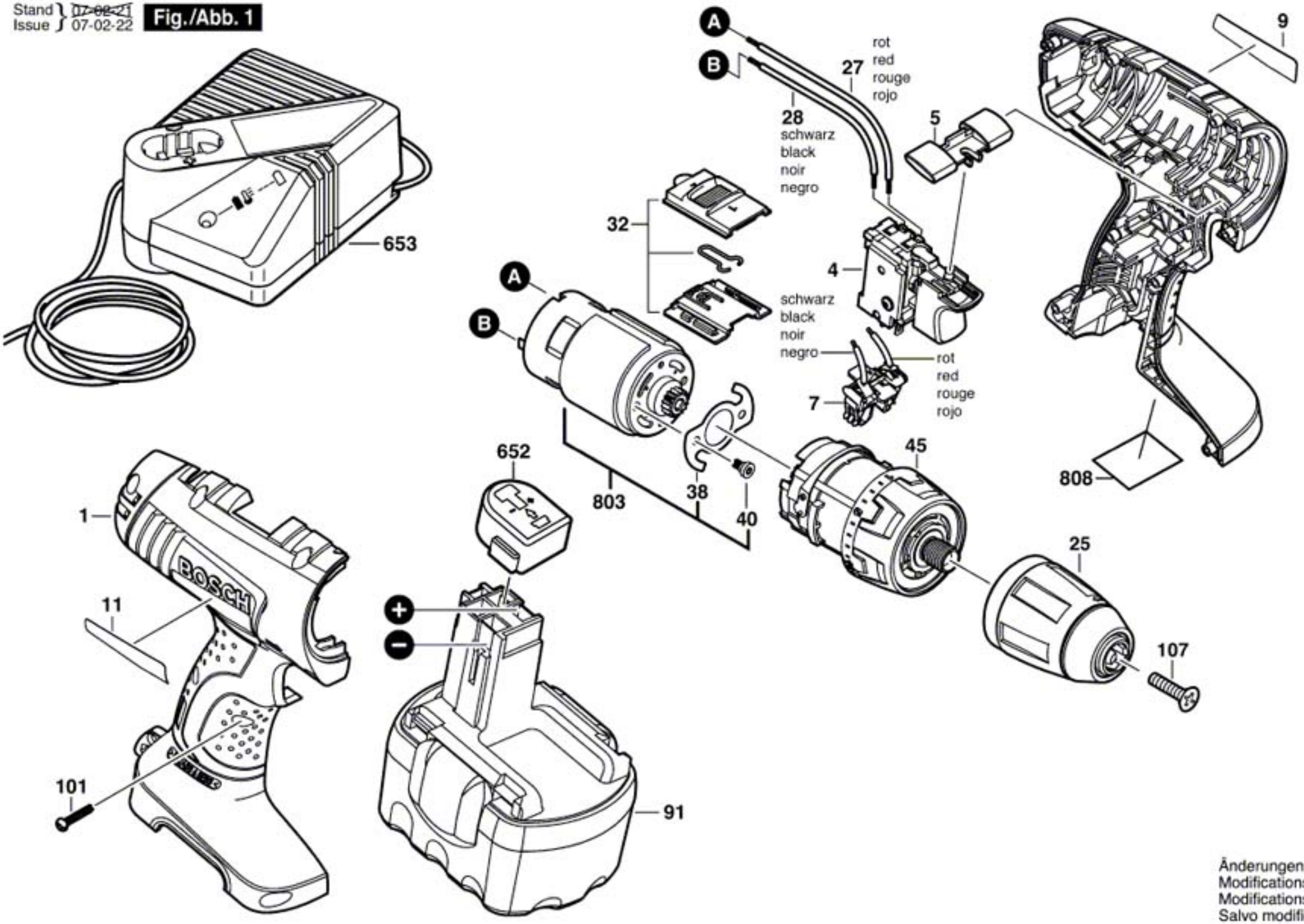

Änderungen vorbehalten
Modifications reserved
Modifications reservees
Salvo modificaciones