3 601 H60 311

Stand / Issue ~~09-01~~ 09-07-08

Fig./Abb. 1

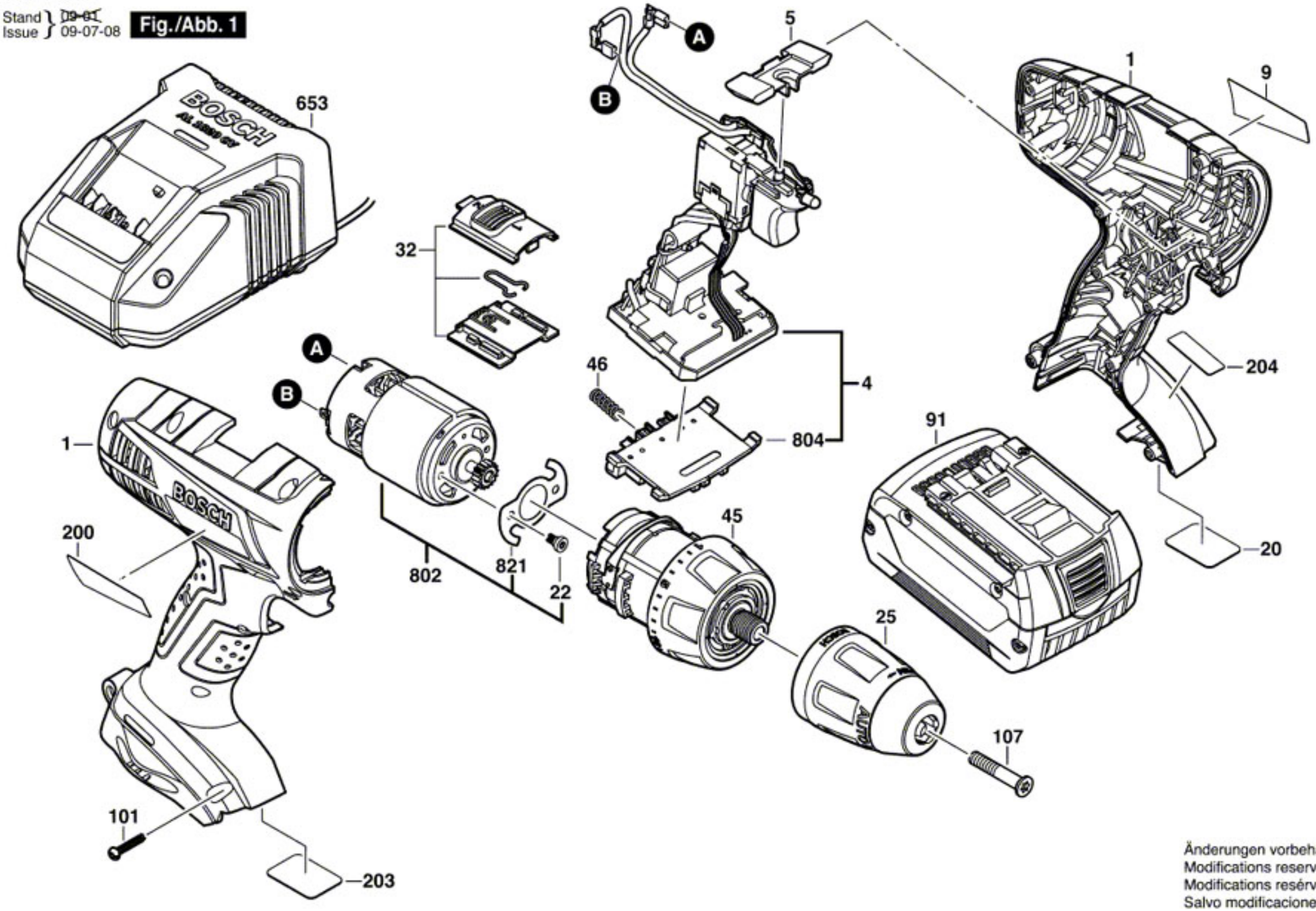

Änderungen vorbehalten
Modifications reserved
Modifications resérvées
Salvo modificaciones