0 601 672 062
Issue } ~~[illegible]~~
Stand } 07-01-31
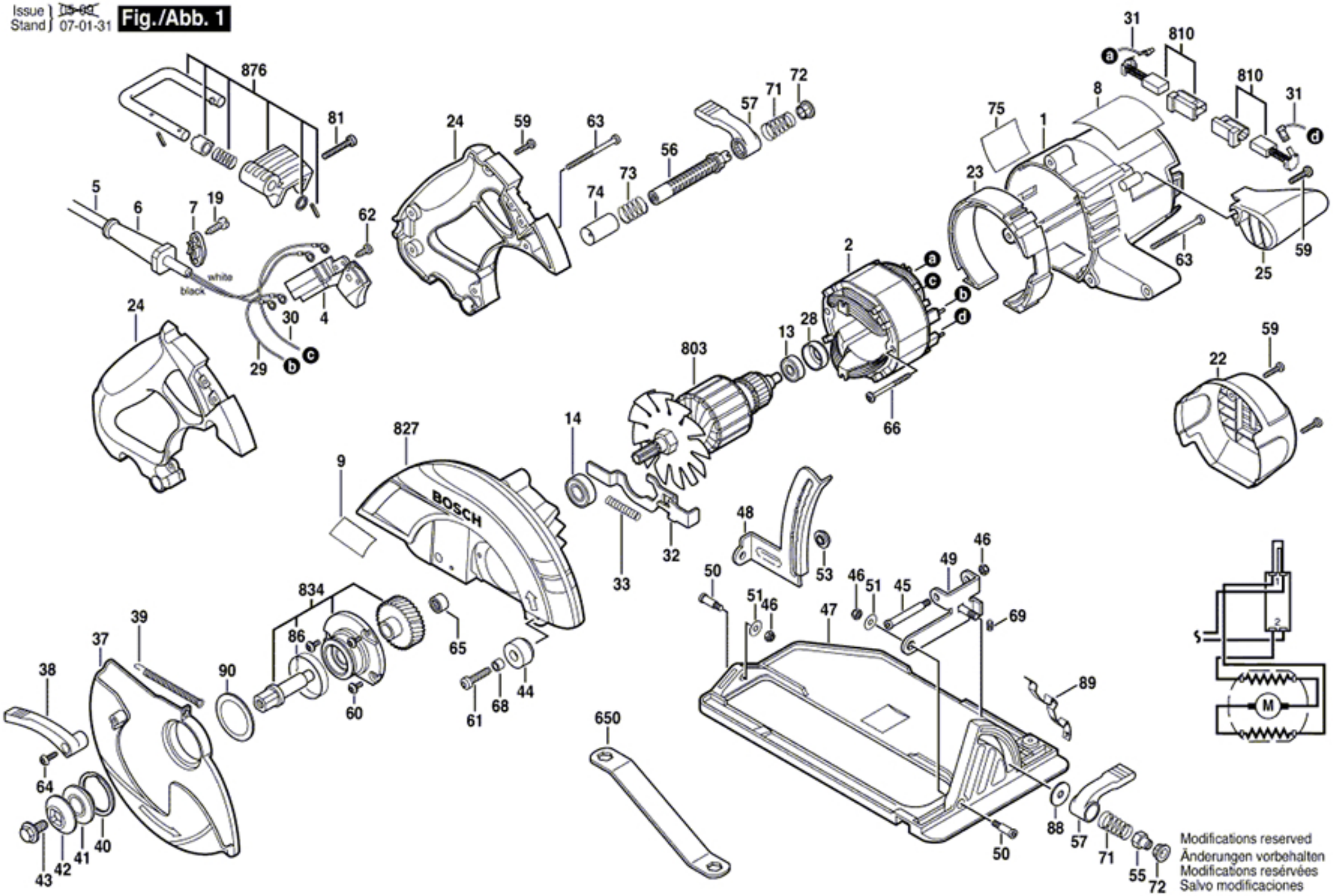
Fig./Abb. 1