0 601 674 057

Issue ~~15-02~~
Stand 07-01-31
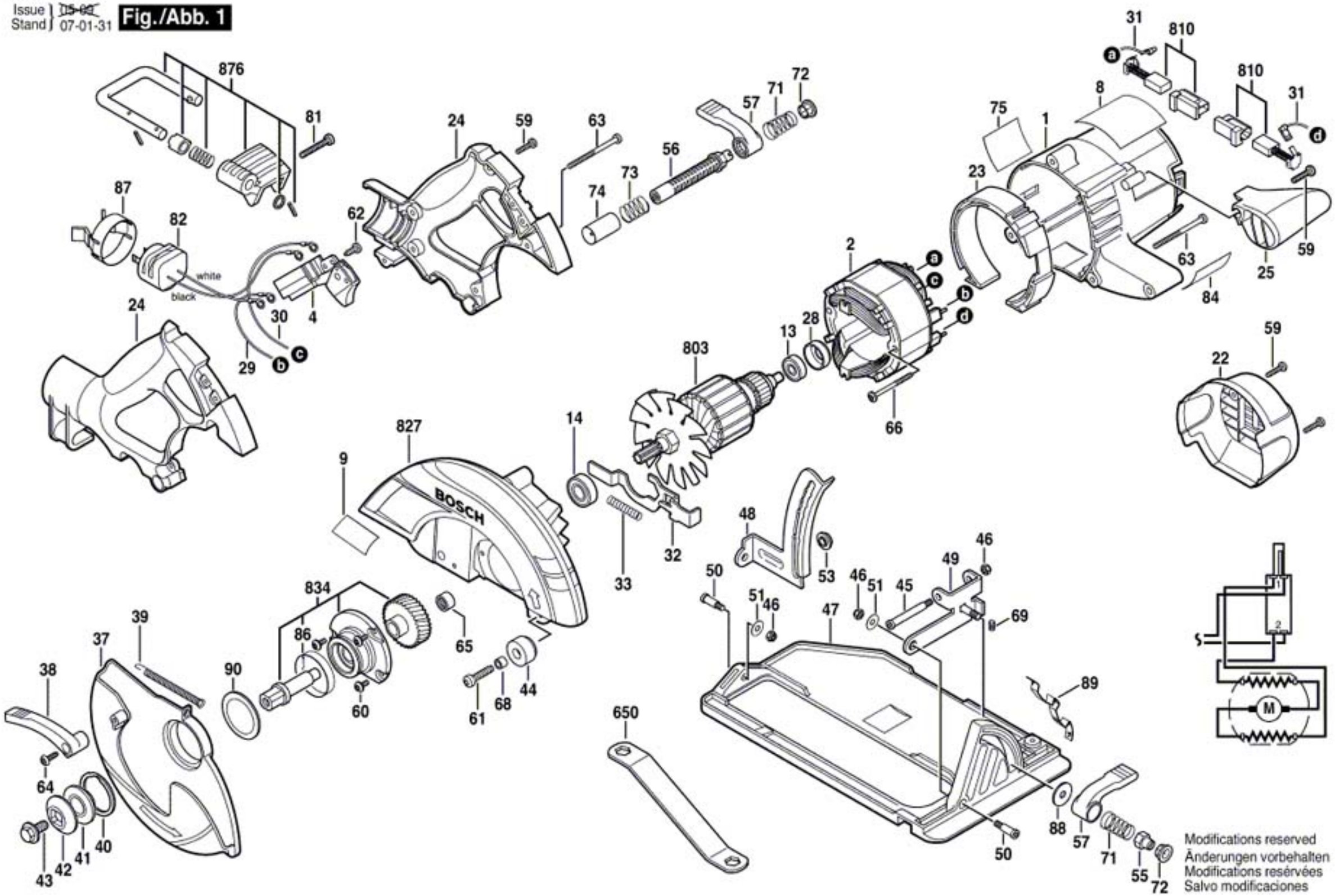
Fig./Abb. 1