HITACHI

LIST NO. F805

ELECTRIC TOOL PARTS LIST

■HEDGE TRIMMER
Model FCH 68Y
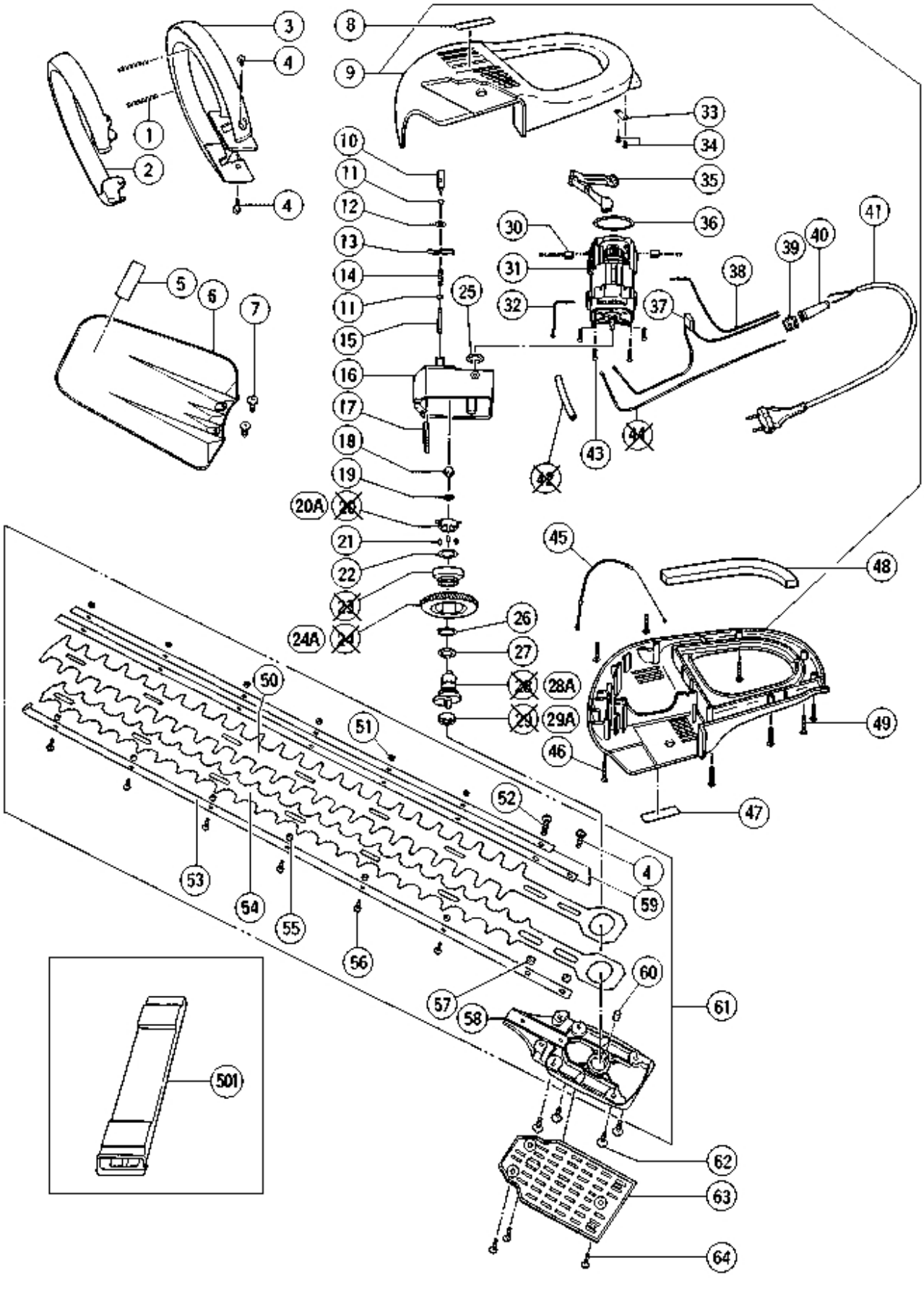
1996・4・20
(E1)