Makita Canada Inc.

makita

12V VACUUM CLEANER — Model 4013D(MJ)
14.4V VACUUM CLEANER — Model 4033D(MJ)

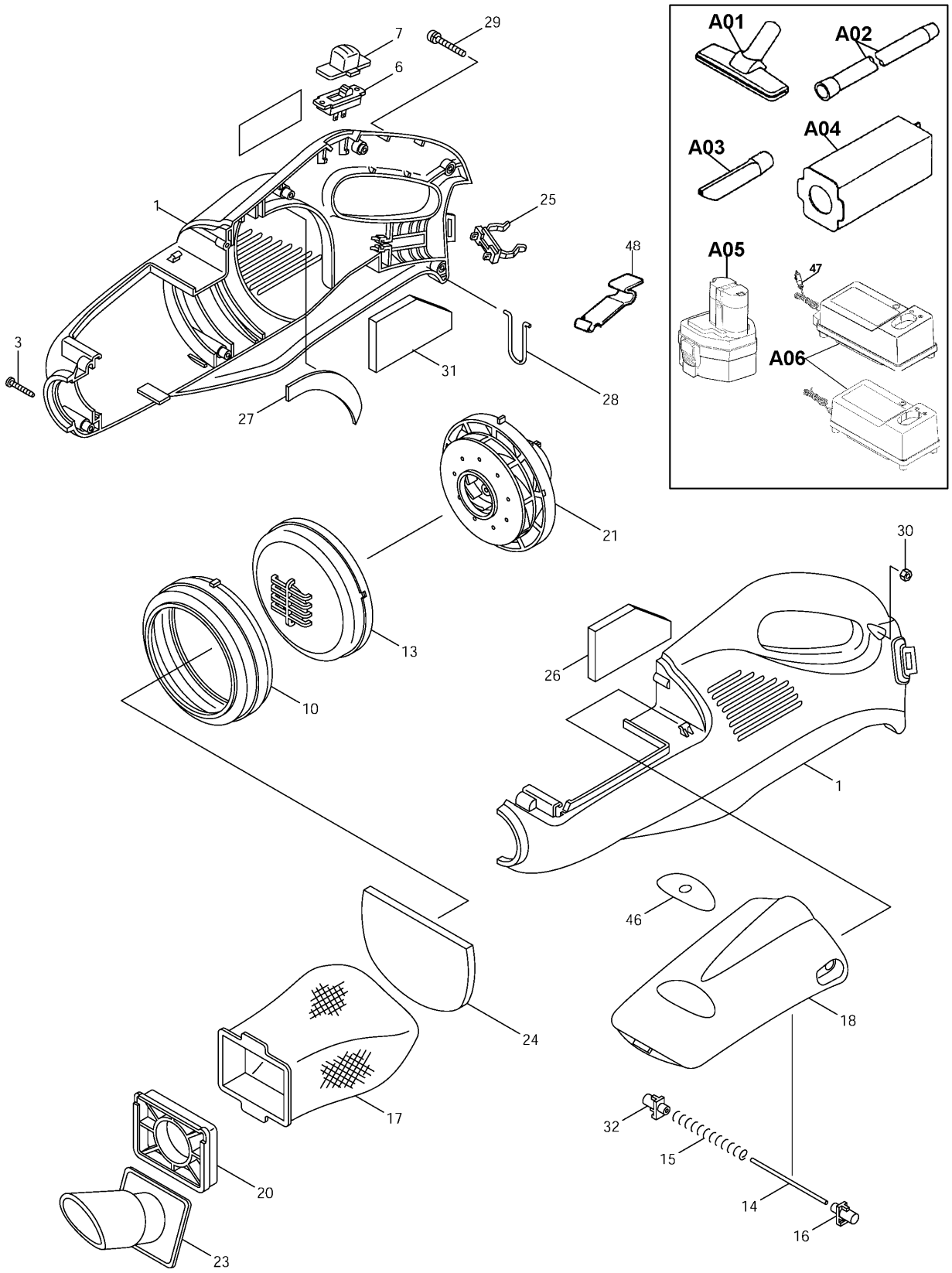

06-2003

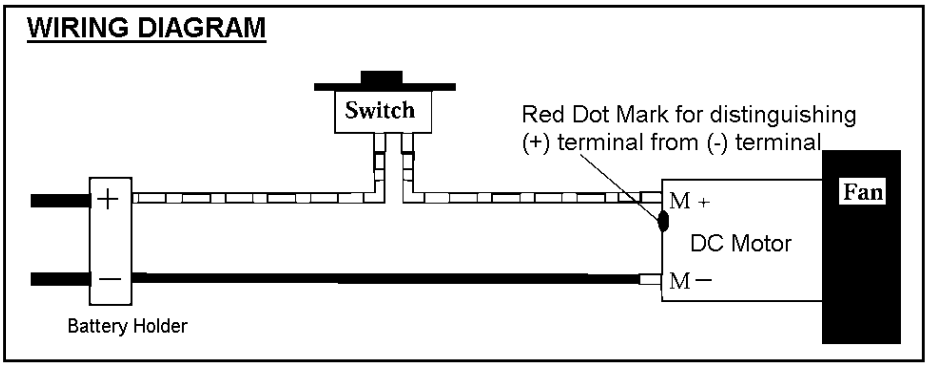

Item No.	Part No.	No. Used	Description
1	KW00000500	1	Housing Set (4013D)
	KW00000509	1	Housing Set (4033D)
3	266127-8	7-8	+ Tapping Screw PT 3X20
6	KW00000501	1	Switch
7	KW00000502	1	Switch Cover Com.
10	421554-8	1	Rubber Ring
13	KW00000504	1	Fan Cover
14	256839-1	1	Rod 2.5
15	233161-3	1	Compression Spring 6
16	416032-1	1	Hook
17	166043-3	1	Dust Bag
18	150624-3	1	Front Cover Com. (Ivory)
20	421553-0	1	Packing
21	KW00000505	1	12V DC Motor (4013D)
	KW00000510	1	14.4V DC Motor (4033D)
23	KW00000021	1	Inlet
24	423287-1	1	Sponge Sheet 70-106
25	643909-9	1	Battery Holder
26	KW00000506	1	Sponge Sheet 65X65
27	KW00000507	1	Sponge Sheet
28	322867-9	1	Hanger
29	911158-9	1	P.H. Screw M4X30
30	931102-0	1	Hex. Nut M4
31	KW00000506	1	Sponge Sheet 65X65
32	416032-1	1	Hook
46	819094-2	1	Makita Label
47	655000-B	1	Plug for Automotive Cigarette Lighter
48	**343579-1**	1	Set Plate (Optional)

Accessories

Item No.	Part No.	No. Used	Description
A01	122520-5	1	Nozzle Assy (Ivory)
A02	416042-8	1	Pipe (Ivory)
A03	416041-0	1	Sash Nozzle (Ivory)
A04	192632-8	1	Paper Filter (5pcs/Set)
A05	- - - - -	1	12V Ni-Cad & Ni-MH Batteries 1.3Ah ~ 3.0Ah, Pod Style (4013D)
	- - - - -	1	14.4V Ni-Cad & Ni-MH Batteries 2.0Ah ~3.0Ah, Pod Style (4033D)
A06	- - - - -	1	Charger (See Catalogue for Details)
	- - - - -	1	12 V Charger (See Catalogue For Details) (Includes Item 47)

2 Model 4013D
2 Model 4033D