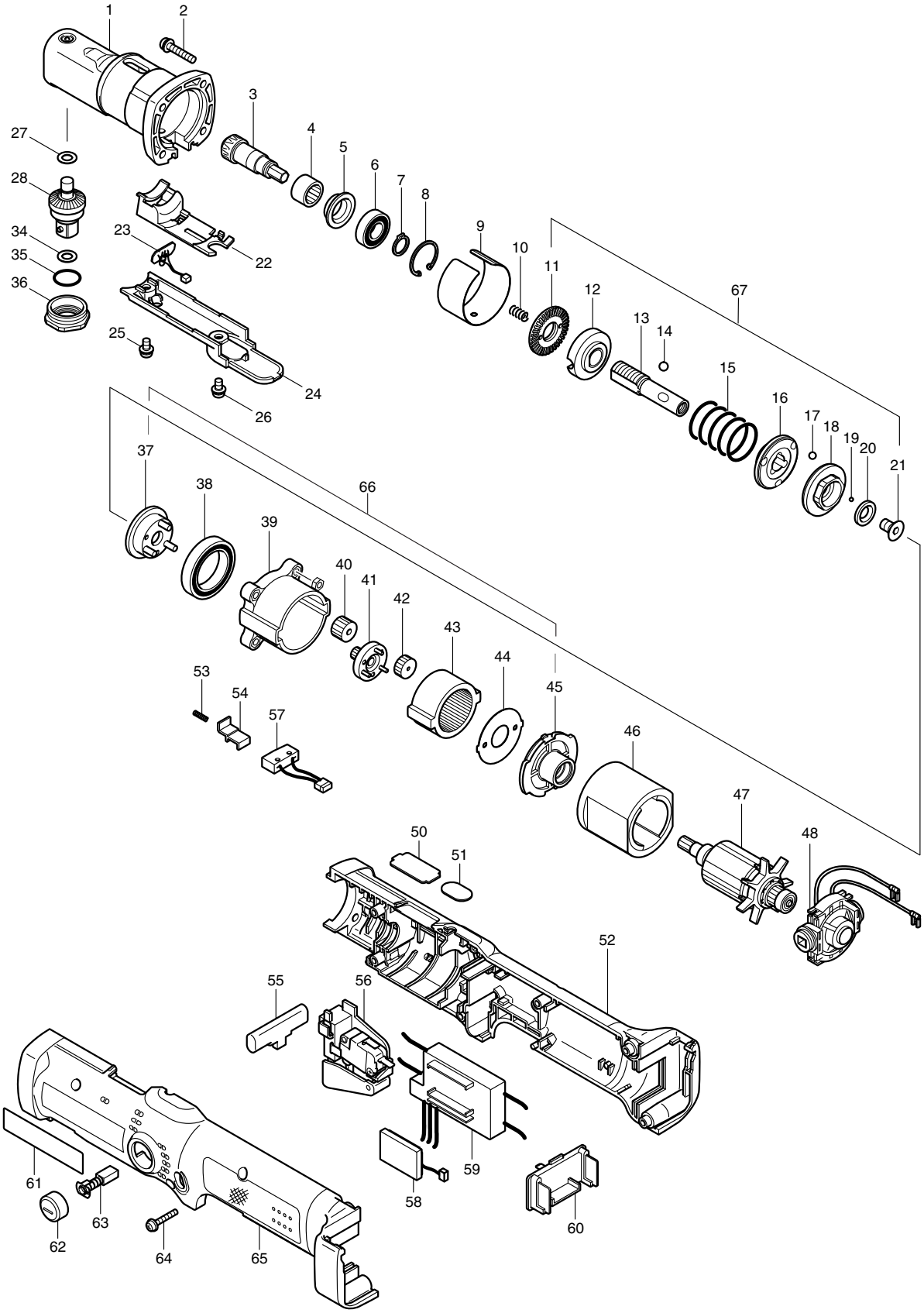
1
2
3
4
5
6
7
8
9
10
11
12
13
14
15
16
17
18
19
20
21
22
23
24
25
26
27
28
34
35
36
37
38
39
40
41
42
43
44
45
46
47
48
50
51
52
53
54
55
56
57
58
59
60
61
62
63
64
65
66
67

Item No.	Part No.	Qty. Used	Description
1	153440-2	1	ANGLE HEAD COMPLETE
2	911143-2	4	PAN HEAD SCREW M4X22
3	227446-7	1	SPIRAL BEVEL GEAR 9
4	212123-4	1	NEEDLE BEARING 1210
5	345281-2	1	SPACER
6	210057-5	1	BALL BEARING 6900LLB
7	961026-6	1	RETAINING RING S-10
8	962112-6	1	RETAINING RING R-22
9	345286-2	1	RING 38B
10	233019-6	1	COMPRESSION SPRING 5
11	324281-5	1	LOCK NUT M12
12	153442-8	1	ADJUST RING COMPLETE
13	324296-2	1	SPINDLE
14	216018-3	3	STEEL BALL 5.0
15	233357-6	1	COMPRESSION SPRING 19B
16	223140-9	1	CAM B
17	216024-8	3	STEEL BALL 4
18	223139-4	1	CAM A
19	216019-1	13	STEEL BALL 3
20	267247-1	1	FLAT WASHER 7
21	266305-0	1	TORX C.S.H. SCREW M5X10
22	418011-5	1	LIGHT HOLDER
23	631513-6	1	LED CIRCUIT
24	418005-0	1	LIGHT COVER
25	911108-4	1	PAN HEAD SCREW M4X8
26	911108-4	1	PAN HEAD SCREW M4X8
27	253726-5	1	FLAT WASHER 6
28	153441-0	1	SPINDLE A COMPLETE
34	253842-3	1	FLAT WASHER 14
35	213162-7	1	O RING 14
36	285707-1	1	BEARING RETAINER 14-23
37	153444-4	1	CARRIER COMPLETE B
38	211375-4	1	BALL BEARING 6805LLB
39	418004-2	1	GEAR CASE
40	227052-8	3	SPUR GEAR 18
41	153447-8	1	SPUR GEAR 9 COMPLETE A
42	227049-7	3	SPUR GEAR 18
43	227048-9	1	INTERNAL GEAR 47
44	267774-8	1	LOCK WASHER
45	418003-4	1	MOTOR BRACKET
46	638183-2	1	YOKE UNIT
47	619094-0	1	ARMATURE
48	687138-4	1	ENDBELL COMPLETE
50	345283-8	1	PLATE B
51	418001-8	1	LENZ
52	183509-8	1	HOUSING SET (INCL. FIG. 61, & 65)
53	233025-1	1	COMPRESSION SPRING 2
54	418002-6	1	SWITCH LEVER
55	417511-2	1	F/R CHANGE LEVER
56	650536-5	1	SWITCH C3Z-5-01
57	638184-0	1	SWITCH UNIT
58	631514-4	1	BUZZER CIRCUIT
59	631511-0	1	CONTROLLER
60	643800-1	1	TERMINAL
61	819003-1	1	MAKITA LABEL
62	643933-2	2	BRUSH HOLDER CAP
63	193466-2	1	CARBON BRUSH CB-434 SET
64	911038-9	6	PAN HEAD SCREW M3X20
65	183509-8	1	HOUSING SET (INCL. FIG. 52, & 61)
ACCESSORIES			
66	125190-9	1	GEAR ASSEMBLY B (INCL. FIG. 37-45)
67	125194-1	1	CLUTCH ASSEMBLY B (INCL. FIG. 11-21)
F02	193531-7	1	BATTERY BH9020A EN/FR/ES
F05	193536-7	1	BATTERY BH9033A EN/FR/ES
F13	418032-7	1	PROTECTOR (YELLOW)
F14	418064-4	1	PROTECTOR (BLUE)
F15	418065-2	1	PROTECTOR (RED)
F16	418066-0	1	PROTECTOR (NON COLOR)