makita 5" ANGLE GRINDER Model GA5000

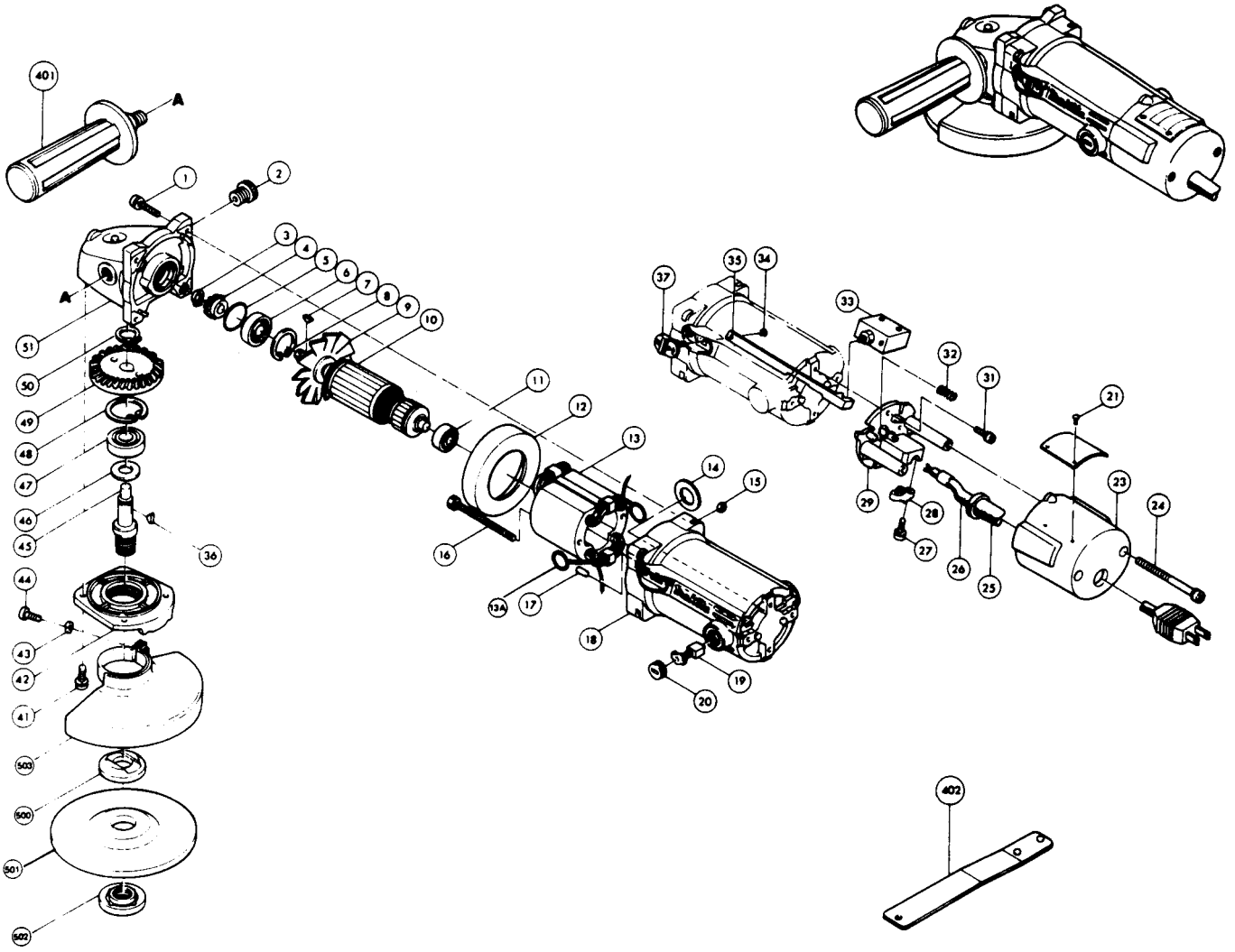

Item No.	Part No.	No. Used	Description	
1	911146-6	4	Screw	M4x25
2	251835-4	1	Cap Screw	M12x12
3	961004-6	1	Retaining Ring	S–8
4	221354-4	1	Spiral Bevel Gear	13
5	213407-3	1	O Ring	
6	211063-3	1	Ball Bearing	6000LB
7	254002-0	1	Woodruff Key	3
8	962105-3	1	Retaining Ring	R–26
9	241319-0	1	Fan	70
10	615151-2	1	ARMATURE ASSEMBLY (Assembled Items 9 – 11)	
11	211033-2	1	Ball Bearing	608LB
12	410021-8	1	Plate	
13	625136-0	1	FIELD with item No. 13A	
13A	654019-7	2	Garter Spring	
14	681001-3	2	Insulation Washer	
15	931102-0	4	Nut	M4
16	925198-1	2	Bolt	M4x70
17	263002-9	1	Rubber Pin	4
18	156901-1	1	Motor Housing (With 2 ea. Brush Holder 643603-3)	
19	643101-7	2	Carbon Brush	
20	643600-9	2	Brush Cap	
21	953106-2	4	Rivet	
23	411938-8	1	Rear Cover	
24	911293-3	2	Screw	M5x70
25	682504-0	1	Cord Guard	
26	664013-1	1	CORD with plug	
27	911121-2	2	Screw	M4x14
28	687001-1	1	Strain Relief	
29	411939-6	1	Switch Holder	
31	911123-8	2	Screw	M4x14
32	231223-1	1	Compression Spring	6
33	651466-3	1	Switch	
34	257903-1	1	Stop Ring	E–2.3
35	410022-6	1	Switch Rod	
36	254002-0	1	Woodruff Key	3
37	411741-7	1	Switch Lever	
41	911126-2	4	Screw	M4x16
42	315397-7	1	Bearing Box	
43	942101-7	1	Washer	5
44	251259-4	1	Screw	M5x16
45	321336-7	1	Spindle	
46	253055-6	1	Washer	12
47	211108-7	1	Ball Bearing	6201LB
48	962151-6	1	Retaining Ring	R–32
49	221355-2	1	Spiral Bevel Gear	40
50	961052-5	1	Retaining Ring	S–12
51	156902-9	1	Gear Housing	
401	273455-5	1	Side Handle	
402	782403-7	1	Lock Nut Wrench	
ACCESSORIES				
500	224178-7	1	Inner Flange	
501	741407-8	1	Grinding Wheel	
502	224509-0	1	Lock Nut	
503	164556-8	1	Wheel Cover	