MAKITA HOME T.E.C.H.

makita

JIG SAW

Model M432

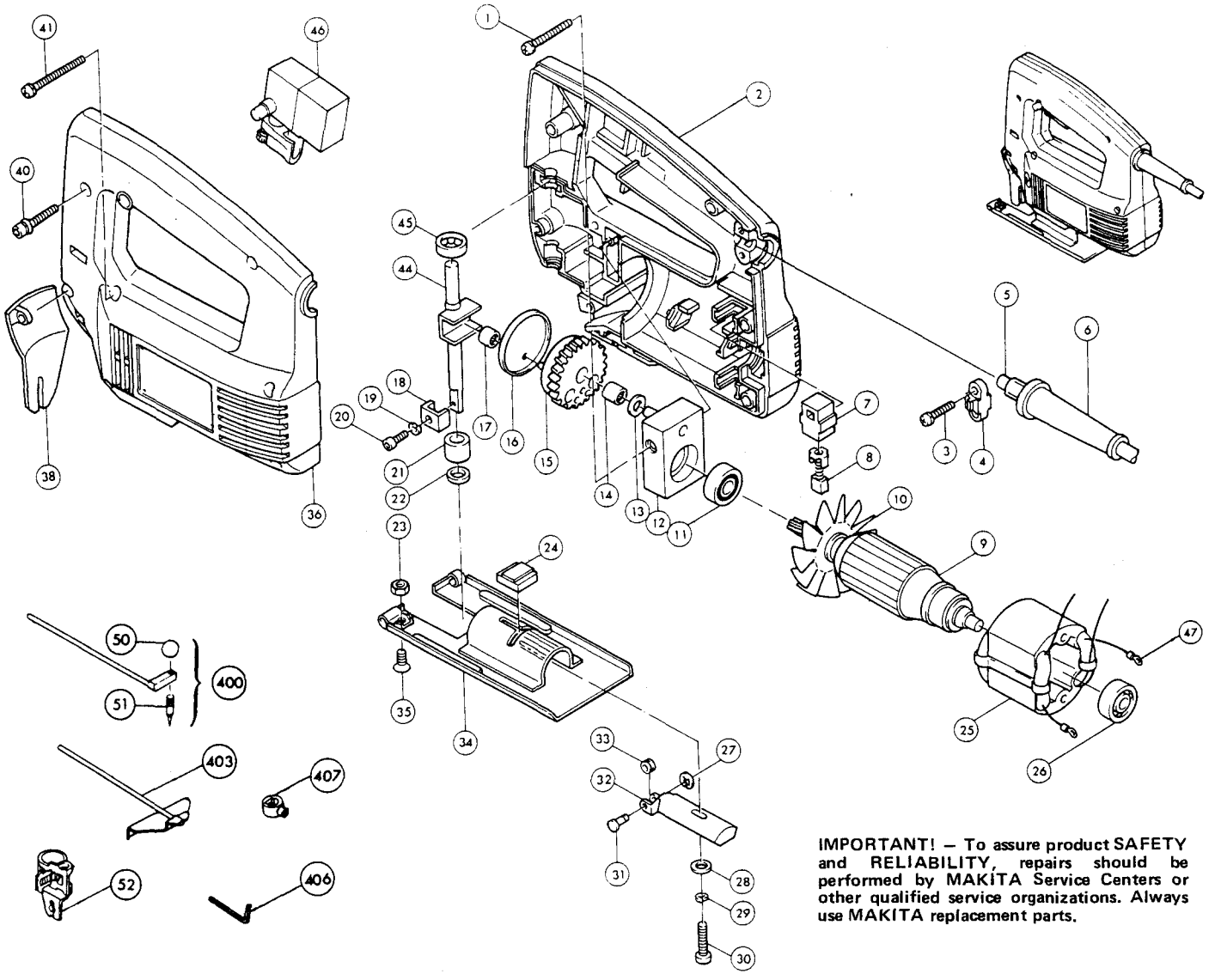

IMPORTANT! – To assure product SAFETY and RELIABILITY, repairs should be performed by MAKITA Service Centers or other qualified service organizations. Always use MAKITA replacement parts.

Item No.	Part No.	No. Used	Description
1	911166-0	1	P.H. SCREW M4x40
2	410583-6	1	HOUSING (R) (With Hex Nut 931102-0)
3	911131-9	2	P.H. SCREW M4x18
4	687001-1	1	STRAIN RELIEF
5	664034-3	1	CORD WITH PLUG (2x18x6: SJT)
6	682502-4	1	CORD GUARD
7	643552-4	2	BRUSH HOLDER
8	643066-3	2	CARBON BRUSH (CB–66)
9	611506-9	1	ARMATURE ASSEMBLY (Includes Items 10, 11 & 26)
10	241081-7	1	FAN
11	211033-2	1	BALL BEARING 608LB
12	152260-1	1	BEARING CASE (With Pin 6 256143-8)
13	267004-7	1	FLAT WASHER 6
14	212011-5	1	NEEDLE BEARING 609
15	153151-9	1	GEAR (With Pin 4 256054-7)
16	342796-0	1	GEAR COVER
17	212014-9	1	NEEDLE BEARING 407
18	331211-9	1	BLADE SET
19	942051-6	1	SPRING WASHER 4
20	922112-8	1	H.S.H. BOLT M4x10
21	214015-3	1	PLANE BEARING 8
22	443031-0	1	FELT RING 8
23	931202-6	1	HEX NUT M5
24	164749-7	1	HOLDER
25	621511-8	1	FIELD ASSEMBLY (With Item 47)
26	211028-5	1	BALL BEARING 627LB
27	257903-1	1	STOP RING E-2.3
28	941051-3	1	FLAT WASHER 4
29	942051-6	1	SPRING WASHER 4
30	922132-2	1	H.S.H. BOLT M4x18
31	256644-6	1	PIN 3
32	342795-2	1	RETAINER
33	321742-6	1	ROLLER
34	164745-5	1	BASE
35	251951-2	1	H.S.H. SCREW M5x10
36	410584-4	1	HOUSING (L) (With Rubber Pin 263002-9)
38	410382-6	1	PROTECTOR
40	911148-2	5	P.H. SCREW M4x25
41	911168-6	2	P.H. SCREW M4x40
44	168136-2	1	SLIDER
45	211080-3	1	BALL BEARING 805
46	651338-2	1	SWITCH (VARIABLE SPEED)
47	654038-3	2	INSULATED EYE TERMINAL
50	271601-3	1	KNOB 20
51	323223-6	1	CIRCULAR GUIDE PIN
52	410048-8	1	WRENCH HOLDER

ACCESSORIES

400	123030-5	1	CIRCULAR GUIDE ASSEMBLY
403	164113-2	1	RIP FENCE
406	783201-2	1	HEX WRENCH 3
407	132276-2	1	UNIVERSAL BLADE CLAMP ASSEMBLY (With Hex Sq. Hd. Bolt 922107-1)