SERVICE PARTS LIST

BULLETIN NO. 55-46-1325

SPECIFY CATALOG NO. AND SERIAL NO. WHEN ORDERING PARTS			REVISED BULLETIN	DATE
SMALL BASE DYMORIG				Nov. 2002
CATALOG NO. 4115-50	STARTING SERIAL NO.	**A08A***	WIRING INSTRUCTION	

EXAMPLE:
00 | 0
Component Parts (Small #) Are Included When Ordering The Assembly (Large #).

***Early production of this stand did not have a serial number.**

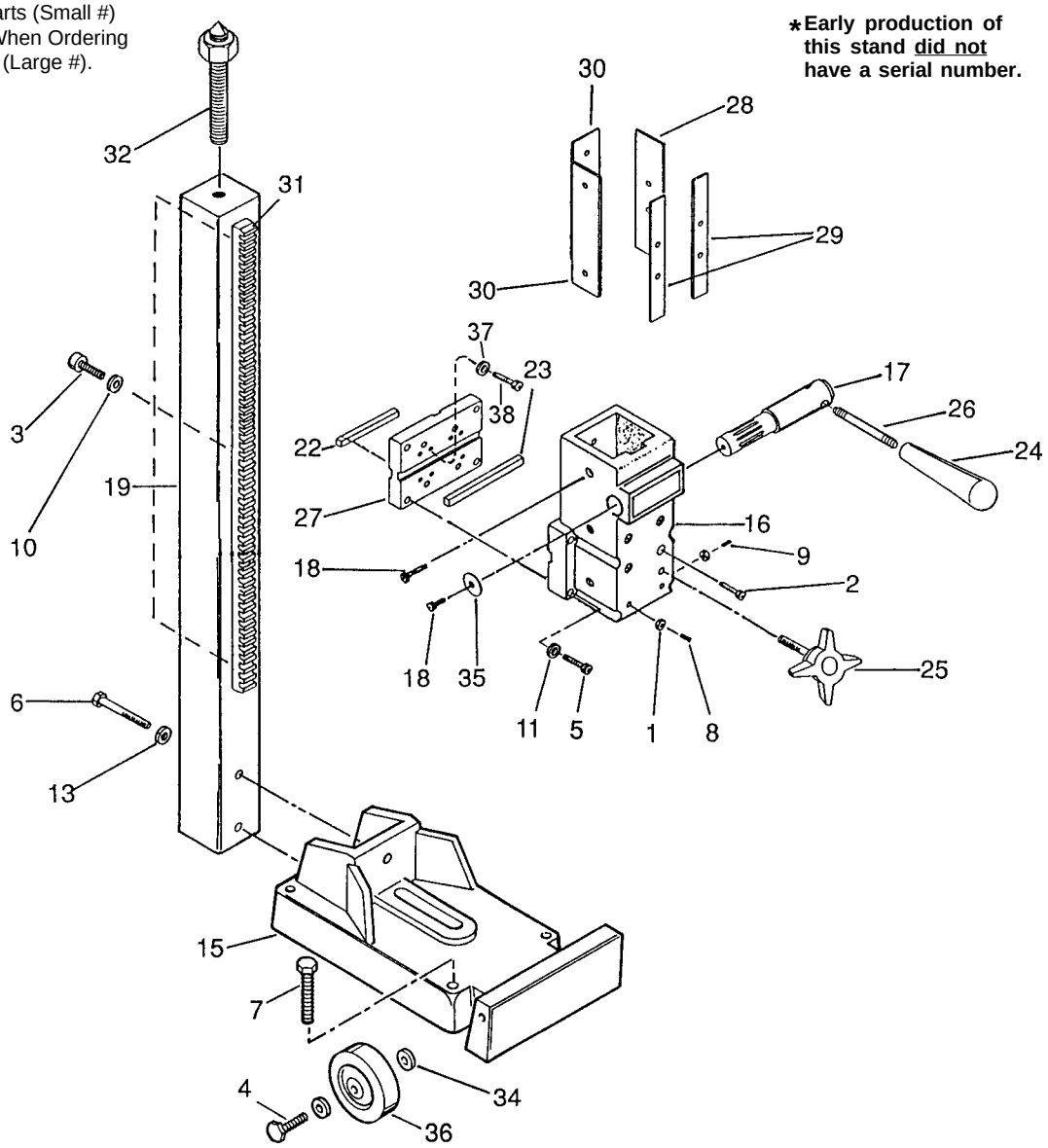

FIG.	PART NO.	DESCRIPTION OF PART	NO. REQ.
1	06-55-1525	1/4-20 Hex Nut	(5)
2	06-75-3050	1/4-20 x 3/4" Socket Hd. Screw	(4)
3	06-75-3920	5/16-18 Socket Hd. Screw	(3)
4	06-75-0970	1/2" Hex Hd. Cap Screw	(2)
5	06-75-5840	3/8-16 Socket Hd. Cap Screw	(4)
6	06-75-5845	5/8-11 Hex Hd. Cap Screw	(2)
★ 7	06-83-5150	5/8-11 x 4-1/2" Hex Head Cap Screw	(4)
8	06-83-6010	1/4-20 x 1-1/2" Set Screw	(3)
9	06-83-6020	1/4-20 x 1" Set Screw	(3)
10	06-97-4110	5/16" Split Ring Lockwasher	(3)
11	06-97-4127	Lockwasher	(4)
13	06-97-4400	5/8" Split Ring Lockwasher	(2)
14	12-99-1935	Nameplate Blank	(1)
15	28-06-1110	Small Base	(1)
16	28-23-3415	Carriage	(1)
17	36-66-4625	Pinion Shaft	(1)
18	06-75-2950	1/4-20 x 1/2" Socket Hd. Cap Screw	(7)
19	42-78-0050	Column	(1)
22	43-96-0200	3/8 x 3/8 x 3" Key	(1)
23	43-96-0210	3/8 x 3/8 x 5" Key	(1)
24	43-98-0095	Plastic Knob	(3)

FIG.	PART NO.	DESCRIPTION OF PART	NO. REQ.
25	43-98-0525	Carriage Screw	(1)
26	44-10-0385	Bar Handle	(3)
27	44-34-0190	Motor Mount	(1)
28	44-52-0605	Wear Pad	(1)
29	44-52-0665	Gib	(2)
30	44-52-0675	Wear Pad	(2)
31	44-80-0175	Rack	(1)
32	45-04-0535	Jack Screw Assembly	(1)
34	45-88-7460	1/2" Flat Washer	(4)
35	45-88-8675	Shaft Washer	(1)
36	45-94-0135	Wheel	(2)
★ 37	06-97-4050	1/4" Lockwasher	(4)
★ 38	06-75-3090	1/4-20 x 7/8" Screw	(4)
	49-96-0060	1/8" Hex Key	(1)
	49-96-0080	3/16" Hex Key	(1)
	49-96-0120	5/16" Hex Key	(1)

MILWAUKEE ELECTRIC TOOL CORPORATION
13135 W. LISBON RD., BROOKFIELD, WI 53005

Drwg. 3