SERVICE PARTS LIST

BULLETIN NO. 54-40-6003

SPECIFY CATALOG NO. AND SERIAL NO. WHEN ORDERING PARTS			REVISED BULLETIN	DATE
7-1/4" CIRCULAR SAW with TILT-LOK® HANDLE			54-40-6002	July 2007
CATALOG NO. 6390-20	SERIAL NUMBER	**983D**	WIRING INSTRUCTION **58-01-1321**	

EXAMPLE:
00 — 0
Component Parts (Small #) Are Included When Ordering The Assembly (Large #).

★ = **Part number change** from previous service parts list.

FIG.	PART NO.	DESCRIPTION OF PART	NO. REQ.
1	02-04-0847	Ball Bearing	(1)
2	02-04-1850	Ball Bearing	(1)
3	02-50-2423	Needle Bearing	(1)
4	05-78-0305	Switch Screw	(4)
5	45-22-0605	Lower Guard Sleeve	(1)
6	06-75-0035	5/16-18 x 9/16" Blade Screw	(1)
7	06-75-5850	5/16 -18 L.H. Thread Bolt	(1)
8	06-75-5860	1/4-20 x 3/4" Hex Hd. Screw	(1)
9	06-82-5314	10-24 x 1/2" Pan Hd. Taptite T-25	(11)
10	06-82-5358	12-24 x 3/4" Pan Hd. Taptite T-27	(3)
11	06-82-5474	10-24 x 1-3/4" Pan Hd. Taptite T-25	(1)
12	06-82-7270	8-16 x 5/8" Pan Hd. Slt. Plastite T-20	(10)
13	06-82-7395	8-16 x 1-3/4" Pan Hd. Plastite T-20	(2)
14	05-88-0305	K50 x 16mm Delta PT Screw	(3)
15	06-82-0090	10-14 x .562 Plastite T-25 Screw	(2)
16	06-95-6290	M5 x 2.24 x 18 PH (PT) Screw	(1)
18	12-20-6390	Service Nameplate Kit	(1)
★19	16-70-0056	Armature Assembly	(1)
★20	18-70-0046	Field	(1)
★21	22-18-1075	Brush Assembly	(2)
★22	22-22-1030	Brush Tube Assembly	(2)
23	22-64-0100	Cord Assembly	(1)
24	23-66-2115	Switch	(1)
27	25-20-0120	Upper Guard Cover	(1)
28	14-67-0256	Bevel Bracket Assembly	(1)
29	28-14-0100	Gearcase	(1)
30	28-41-1032	Lower Guard Kit	(1)
31	31-05-0045	Baffle	(1)
★32	31-15-0465	Motor Cover	(1)
★33	31-44-0055	Right Handle Half	(1)
34	31-44-0060	Front Handle	(1)
★35	31-44-0075	Left Handle Half	(1)
36	31-44-2156	Handle Lever	(1)
★37	31-50-2225	Motor Housing Assembly	(1)
38	31-52-0015	Depth Lever	(1)
39	31-52-0025	Guard Lever	(1)
40	32-75-3205	Gear	(1)
41	34-40-1375	O-Ring	(1)
42	34-40-1380	O-Ring	(1)
43	34-60-0320	External Retaining Ring	(1)
44	34-60-2330	Klip Ring	(1)
45	38-50-0060	Spindle	(1)
46	40-50-0045	Guard Spring	(1)
47	40-50-0055	Compression Spring	(1)
48	40-50-8040	Spring	(1)
49	42-16-0160	Handle Band	(1)
50	42-38-0222	Rubber Bumper	(1)
51	42-42-0275	Spindle Lock Button	(1)
52	43-34-0790	Inner Flange	(1)
53	43-34-0795	Outer Flange	(1)
54	43-78-0155	Hub (With Bearing)	(1)
55	44-10-0130	Bevel Adjustment Lever	(1)
56	44-20-0510	Spindle Lock Pin	(1)
57	44-40-0780	Adjustment Nut	(1)
59	44-60-0075	Thru Pin	(1)
60	44-60-0085	Tapped Pin	(1)
61	44-60-1180	Pivot Pin	(1)
62	44-66-0065	Retaining Plate	(1)
64	44-66-0200	Lock Plate	(1)
65	44-72-0050	Pointer	(1)
66	45-04-0485	Bumper Screw	(1)
68	45-08-0416	Depth Shaft	(1)
69	45-16-0160	Shoe Assembly	(1)
70	45-88-0577	Wave Spring Washer	(2)
71	45-88-8461	Washer	(1)
72	45-88-8460	5/16" Washer	(1)
74	49-96-0345	Blade Wrench (Not Shown)	(1)
★75	----------	Fan	(1)

FIG.	NOTE
1	Orient the ball bearing so that the seal faces the commutator.
3,29	Orient the needle bearing such that the text is facing the gear. Press the bearing .015" subflush to the gear cavity wall.
11	Tighten the handle lever screw such that it requires 3-7 lbs. force to close the handle lever to the locked position.
29	Apply .320 - .360 oz. "Y" Grease, No. 49-08-5270, to gear bore of upper guard gearcase. The grease should be directed toward the pinion end of the armature.
29,31	Orient the baffle with the crush ribs aligned with the screw holes in the motor housing and the locator tabs aligned and seated as shown.
30	Functionally check the lower guard with the saw set at full depth of cut and zero degree bevel. Place the saw upside down with the shoe horizontal. Retract the lower guard 100%. Release the lower guard lever. The guard should return in a brisk manner.
38	When tight, the depth adjustment lever should be parallel (±20°) with the shoe.
43	Orient the external retaining ring such that the beveled face is towards the guard.
55	When tight, the bevel adjustment lever should be bottomed out on the shoe. (Up to .100" off the shoe is acceptable).
28,65	Position the pointer such that the arrow indicates between the zero and one degree mark on the bevel plate scale. Loosen front handle screws to adjust pointer.
71	Orient the washer such that the rounded edge is towards the depth rail.
72	Orient the washer such that the rounded edge is towards the bevel plate.

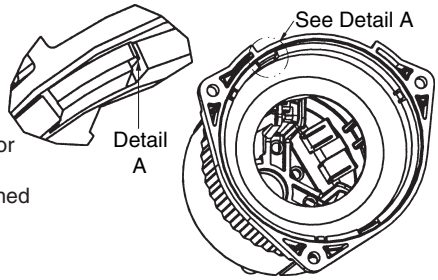

MILWAUKEE ELECTRIC TOOL CORPORATION
13135 W. LISBON RD., BROOKFIELD, WI 53005

Drwg. 1

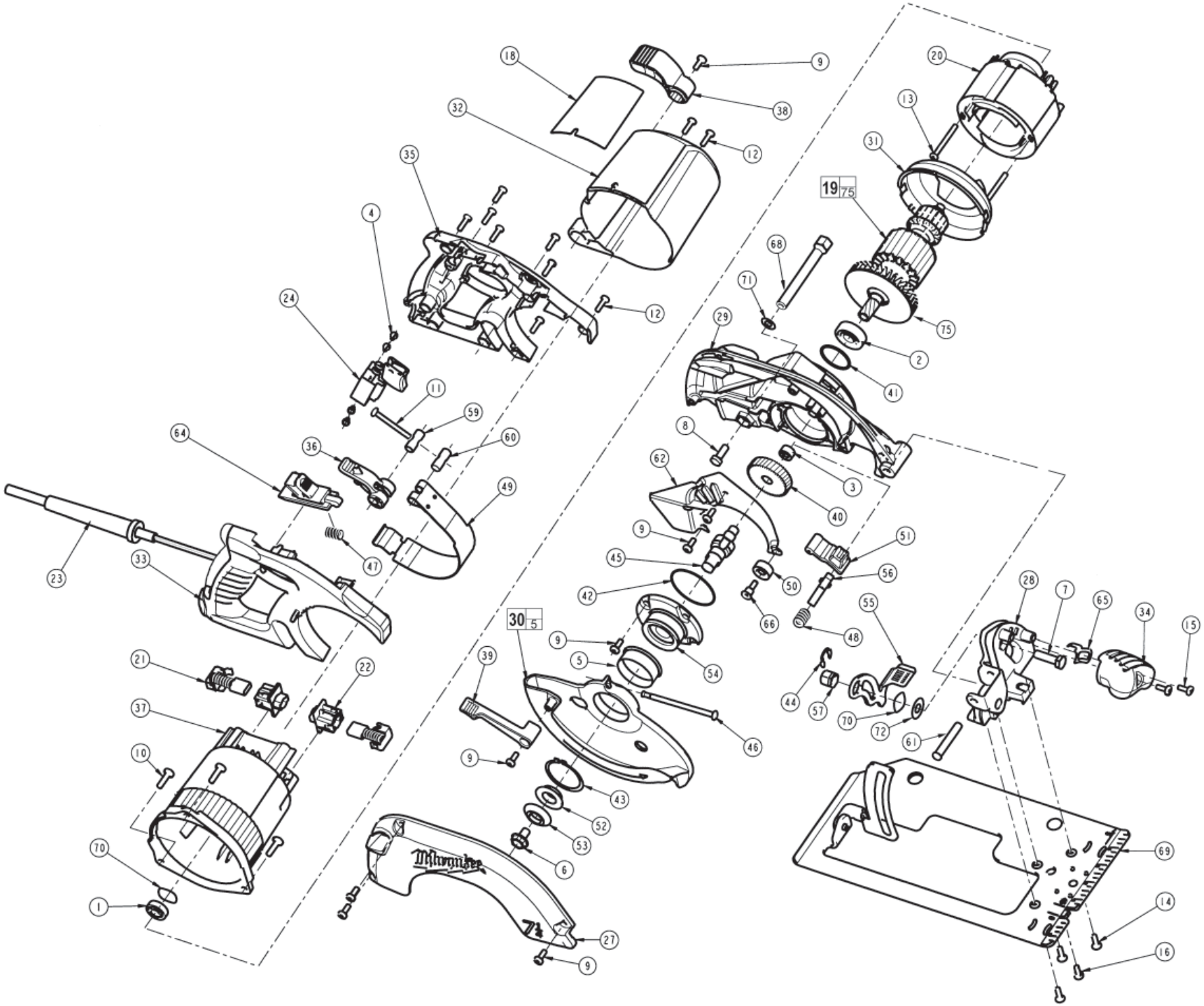
18
9
38
32
12
35
4
24
12
11
59
60
64
36
49
47
23
33
21
22
37
10
70
1
39
30 5
9
5
9
43
52
53
6
27
9
Milwaukee
20
13
31
19 75
68
71
75
29
2
41
8
62
3
40
9
51
45
56
42
50
66
48
55
54
46
44
57
70
72
61
28
7
65
34
15
69
14
16