F012 935 000

Issue Stand } 03-09-22 **Fig./Abb. 1**

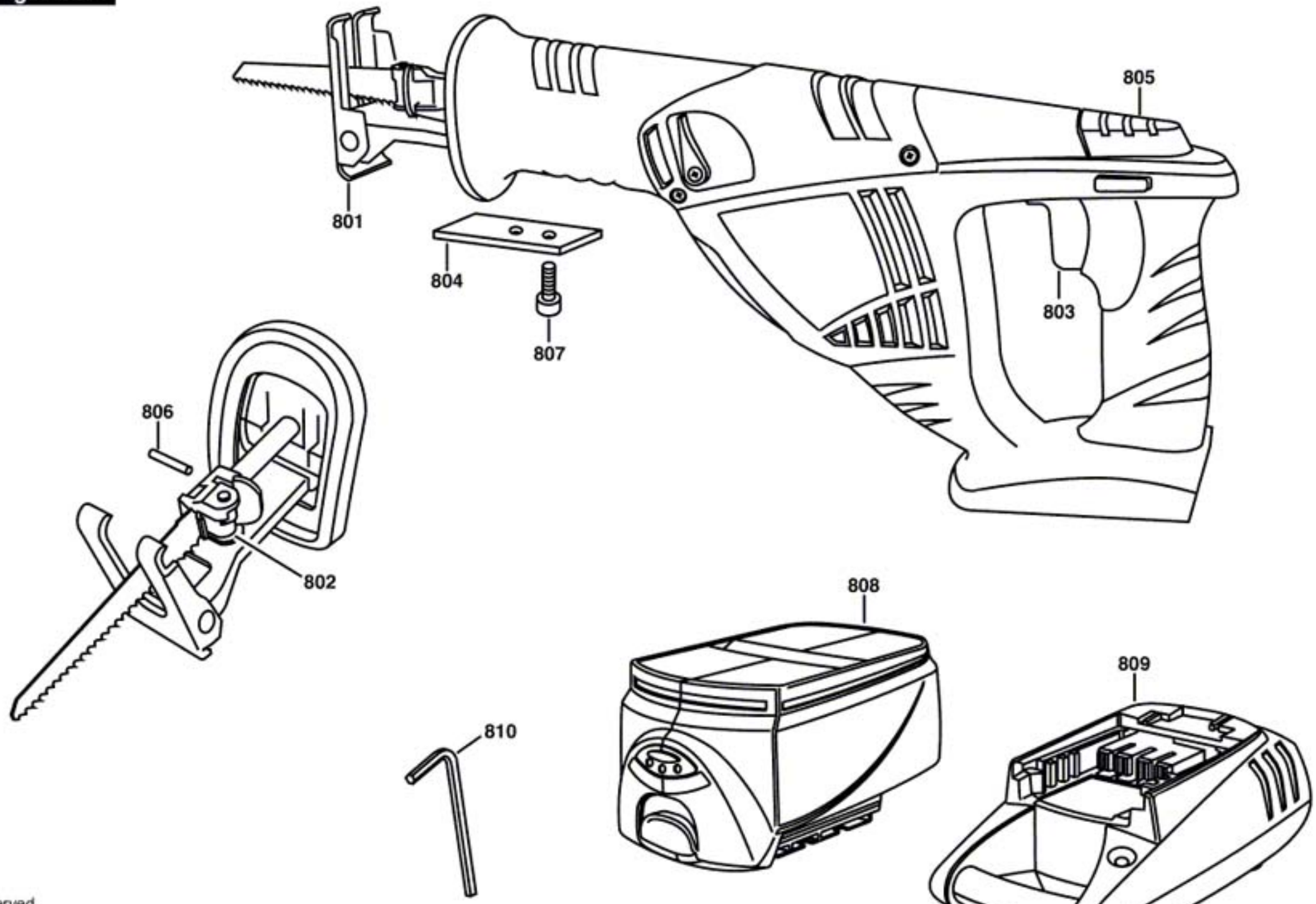

Modifications reserved
ƒnderungen vorbeha]ten
Modifications resÉrvÉes
Salvo modificaciones